CBSE 12th Biology 2009 Unsolved Paper Delhi Board

TIME - 3HR. | QUESTIONS - 30

THE MARKS ARE MENTIONED ON EACH QUESTION

SECTION - A

Q.1. Why hnRNA is required to undergo splicing? *1 marks*

Q.2. The microscopic pollen grains of the past are obtained as fossils. Mention the characteristic of the pollen grains that marks it happen. *1 marks*

Q.3. How does colostrum provide initial protection against diseases to new born infants? Give one reason. *1 marks*

Q.4.

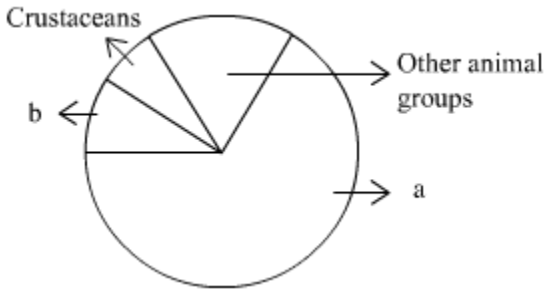

Name the unlabeled areas, a, and 'b' of the pie chart (given above) representing the global biodiversity of invertebrates showing their proportionate number of species of major taxa. *1 marks*

Q.5. Mention the types of evolution that has brought the similarity as seen in potato tuber and sweet potato. *1 marks*

Q.6. Name the group of organisms and the substrate they act on to produce biogas. *1 marks*

Q.7. Mention the pollinating agent of an inflorescence of small dull colored flowers with well exposed stamens and large feathery stigma. Give any one characteristic of pollen grains produced by such flowers. *1 marks*

Q.8. Name the organism commercially used for the production of single cell protein. *1 marks*

SECTION – B

Q.9. Explain the contribution of thermus aquaticus in the amplification of a gene of interest. *2 marks*

Q.10.

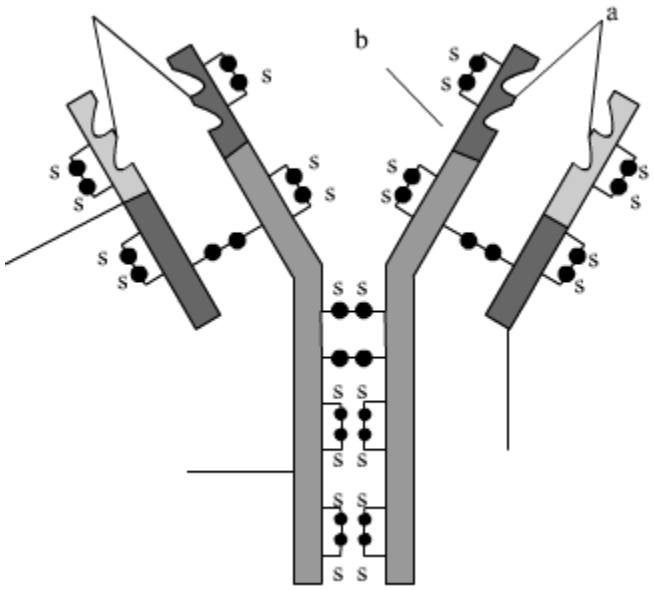

(i) What does the above diagram illustrate? *2 marks*

(ii) Name the parts labelled 'a' and 'b'.

(iii) Name the types of cells that produce this molecule.

Q.11. Banana is a parthenocarpic fruit where oranges show polyembryony. How are they different from each other with respect to seeds? *2 marks*

OR

Where are, fimbriae present in a human female reproductive system? Give their function.

Q.12. How is the translation of mRNA terminated? Explain. *2 marks*

Q.13. Explain accelerated eutrophication. Mention any two consequences of this phenomenon. *2 marks*

Q.14. List the specific symptoms of amoebiasis. Name the causative organism. *2 marks*

Q.15. A crane had DDT level as 5 ppm in its body. What would happen to the population of such birds? Explain giving reasons. *2 marks*

Q.16. Describe the responsibility of GEAC, set up by the Indian Government. *2 marks*

Q.17. During the secondary treatment of the primary effluent how does the sacrificing decrease in BOD occur? *2 marks*

Q.18. Study the figure given below and answer the questions: *2 marks*

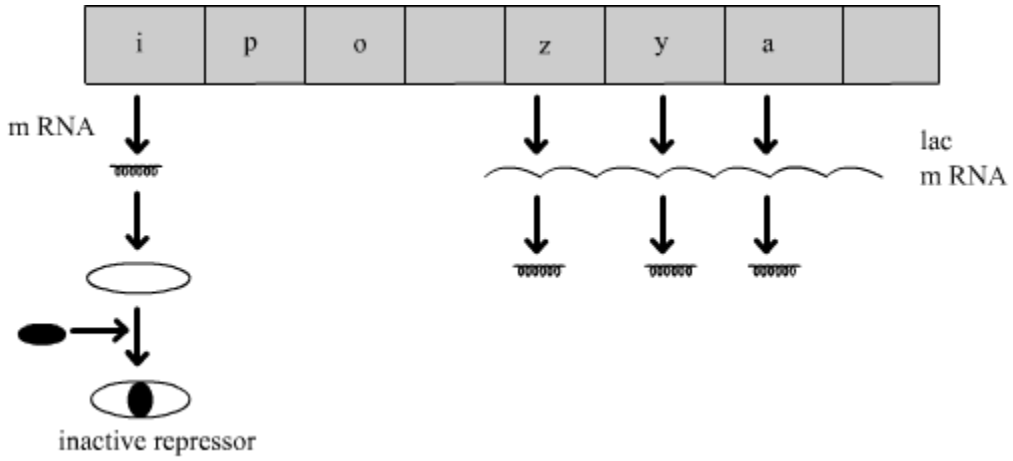

(a) How does the repressor molecule get inactivated?
(b) When does the transcription of lac mRNA stop?
(c) Name the enzyme transcribed by the gene'z'.

SECTION – C

Q.19. Name the pioneer species on a bare rock. How do they help in establishing? the next type of vegetation? Mention the type of climax community that will ultimately get established. *3 marks*

Q.20. Study the figure given below and answer the questions that follow: *3 marks*

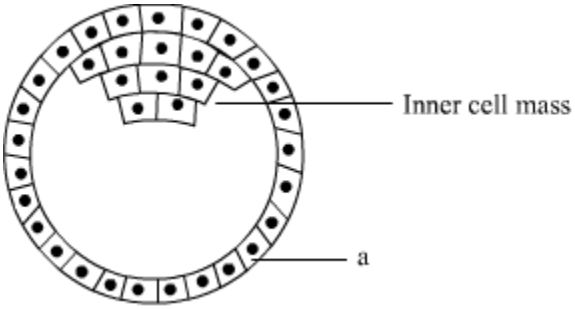

(a) Name the stage of human embryo the figure represents.
(b) Identify 'a' in the figure and mention its function.
(c) Mention the fate of the inner cell mass after implantation in the uterus.
(d) Where are the stem cells located in this embryo?

Q.21. Give the scientific name of the parasite that causes malignant malaria in humans. At what stage does this parasite enter the human body? Trace its life cycle in human body. *3 marks*

Q.22. Draw a labelled schematic sketch of replication fork of DNA. Explain the role of the enzymes involved in DNA replication. *3 marks*

Q.23. Explain the cause of global warming why is it a warning to mankind? *3 marks*

Q.24. Haemophilia is a sex linked recessive disorder of humans. The pedigree chart given below shows the inheritance of haemophilia in one family. pattern Study the of inheritance and answer the questions given.

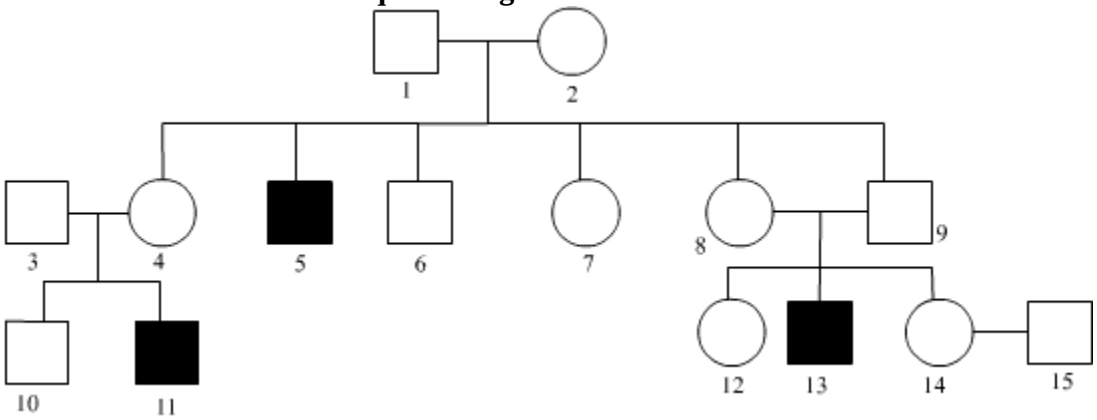

(a) Give all the possible gerrot5ryes of the members 4,8 and 6 in the pedigree chart.

(b) A blood test shows that the individual 14 is a carrier of haemophilia. The member numbered 15 has recently married the member numbered 14. What is the probability that their first child will be a haemophilie male? *3 marks*

OR

Inheritance pattern of ABO blood group in human shows dominance, codominance and multiple allelism. Explain each concept with the help of blood group genotypes.

Q.25.

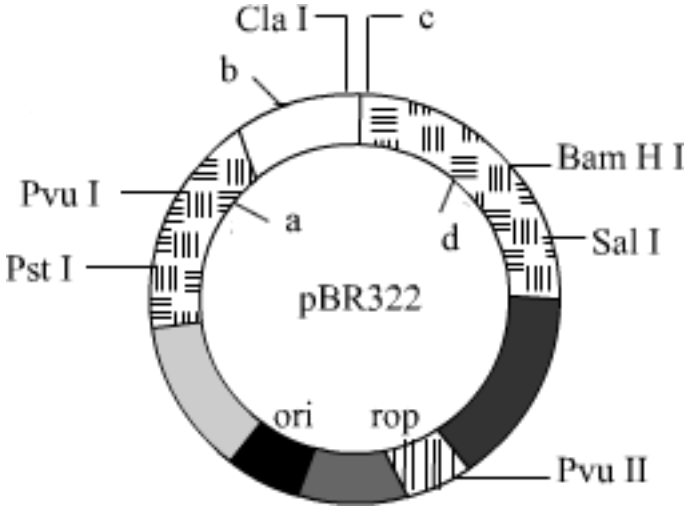

(a) Identity the selectable markers in the diagram of E. Coli vector shown above.

(b) How is the coding sequence of α galactosidase consider a better marker than the ones identified by you in the diagram? Explain. *3 marks*

Q.26. (a) Mention the specific geographical region where these organisms are found.

(b) Name and explain the phenomenon that has resulted in the evolution of such diverse species in the region.

(c) Explain giving reason the existence of placental wolf and Tasmania wolf sharing the same habitat. *3 marks*

Q.27. Construct an ideal pyramid of energy when 1,000,000 joules of sunlight is available. Label all its tropic levels. *3 marks*

SECTION – C

Q.28. Explain with the help of a diagram the development of a mature embryo sac from a megaspore mother cell in angiosperm. *5 marks*

OR

Study the following flow chart. Name the hormones involved at each stage. Explain their functions.

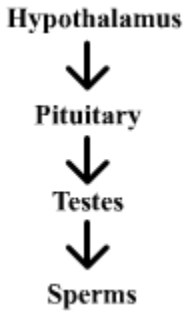

Q.29. (a) Explain the experiment performed be Griffith on Streptococcus pneumonia. What did he conclude from this experiment? *5 marks*

(b) Name the three scientists who followed up Griffith's experiments.

(c) What did they conclude and how?

OR

Two blood samples A and B picked up from the crime scene were handed over to the forensic department for genetic finger printing. Describe how the technique of genetic finger printing is carried out. How will it be confirmed whether the samples belonged to the same individual or two different individuals?

Q.30. One of the main objective of biotechnology is to minimize the use of insecticides on cultivated crops. Explain with the help of a suitable example how insect resistant crops have been developed using techniques of biotechnology. *5 marks*

OR

(a) How is mature insulin different from proinsulin secreted try pancreas in humans?

(b) Explain how was human functional insulin produced using rDNA technology.

(c) Why is the functional insulin thus produced considered better than the ones used earlier by diathetic patients?